JOY TUTUS

A02 EN

USAGE GUIDELINES

SKU: A1318-00216-BK

IMPORTANT

Before installation, please make sure that all accessories are ready.
(As shown in the picture below)

Estimated installation time:

30 minutes

CUSTOMER SUPPORT

Contact us by email:
service@joytutus.com

JOYTUTUS help center:

http://support.joytutus.com

PRODUCT INFORMATION

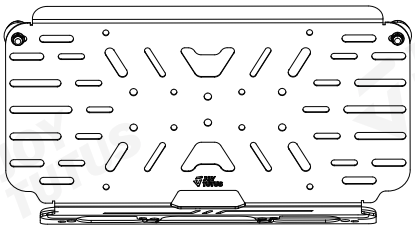

❶ F150 Lamp Bracket Main Body **x1**

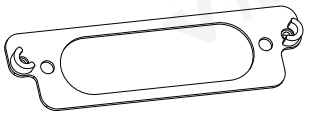

❷ Mounting Plate **x1**



❸ M6*30 Hexagon Socket Button Head Screw **x3**
(Includes 1 spare)



❹ M6 Standard Spring Washer **x3**
(Includes 1 spare)

❺ **x4**
Φ4*Φ10*1.5 Rubber Gasket

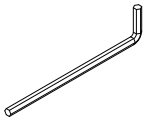

❻ S=4 Hex Key **x1**

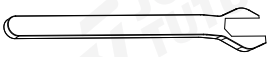

❼ 13mm Open-End Wrench **x1**

(Self-provided Tools)

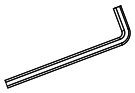

S=3 Hex Key

INSTALLATION COMPLETION DIAGRAM

Cable Routing Holes (3 positions):
Select the appropriate hole based on your light strip length for wiring installation.

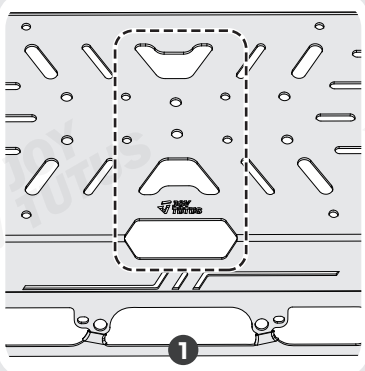

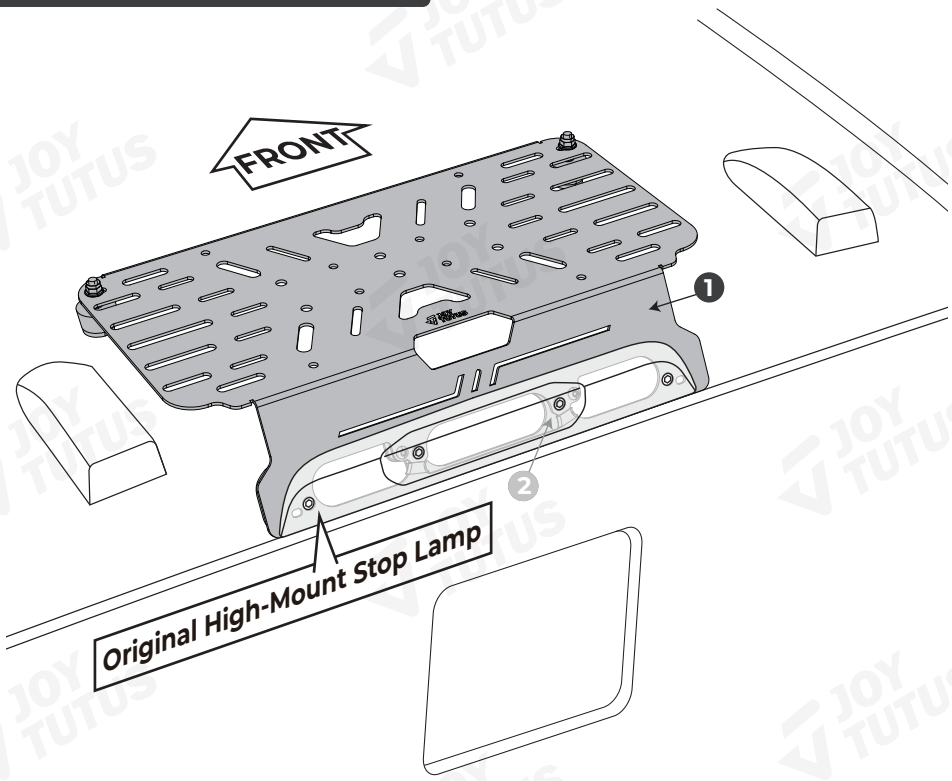

INSTALLATION METHOD

STEP 1:

STEP 1-1: Remove the four original screws from the high brake light.

Required accessories:



S=3 Hex Key
(Self-provided)

STEP 1-2: Removing the original high-mount stop lamp. (Press the clips and unplug the connector.)

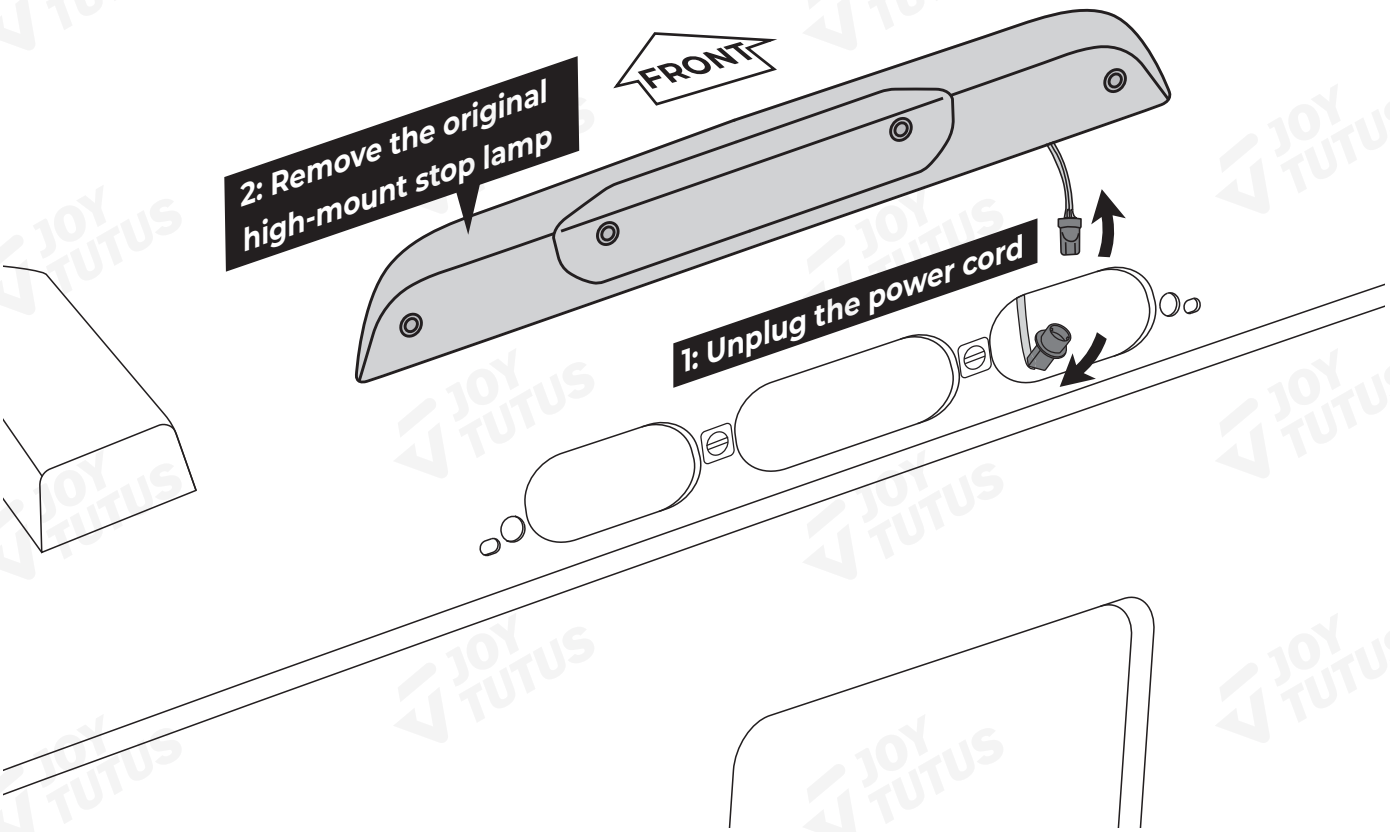

STEP 1-3: Wipe clean the installation area and surrounding vehicle body surface.

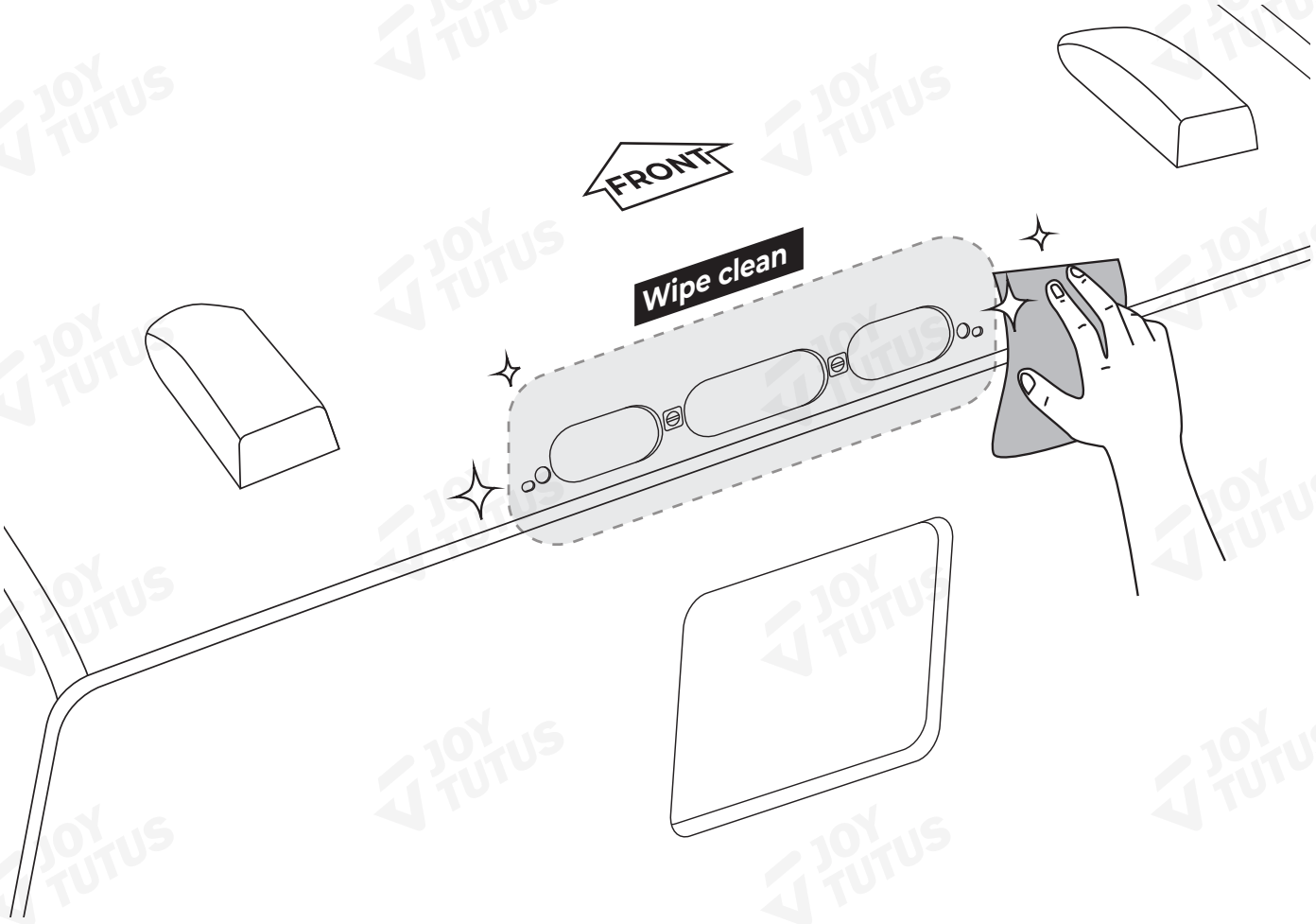

STEP 2:

Required accessories:

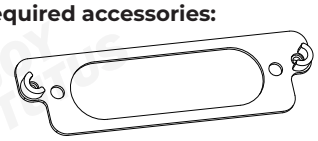

❷ Mounting Plate **x1**

STEP 3:

Required accessories:

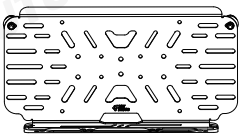

❶ F150 Lamp Bracket Main Body **x1**



❸ M6*30 Hexagon Socket Button Head Screw **x2**



❹ M6 Standard Spring Washer **x2**



❻ S=4 Hex Key **x1**



❼ 13mm Open-End Wrench **x1**

Installation Position:



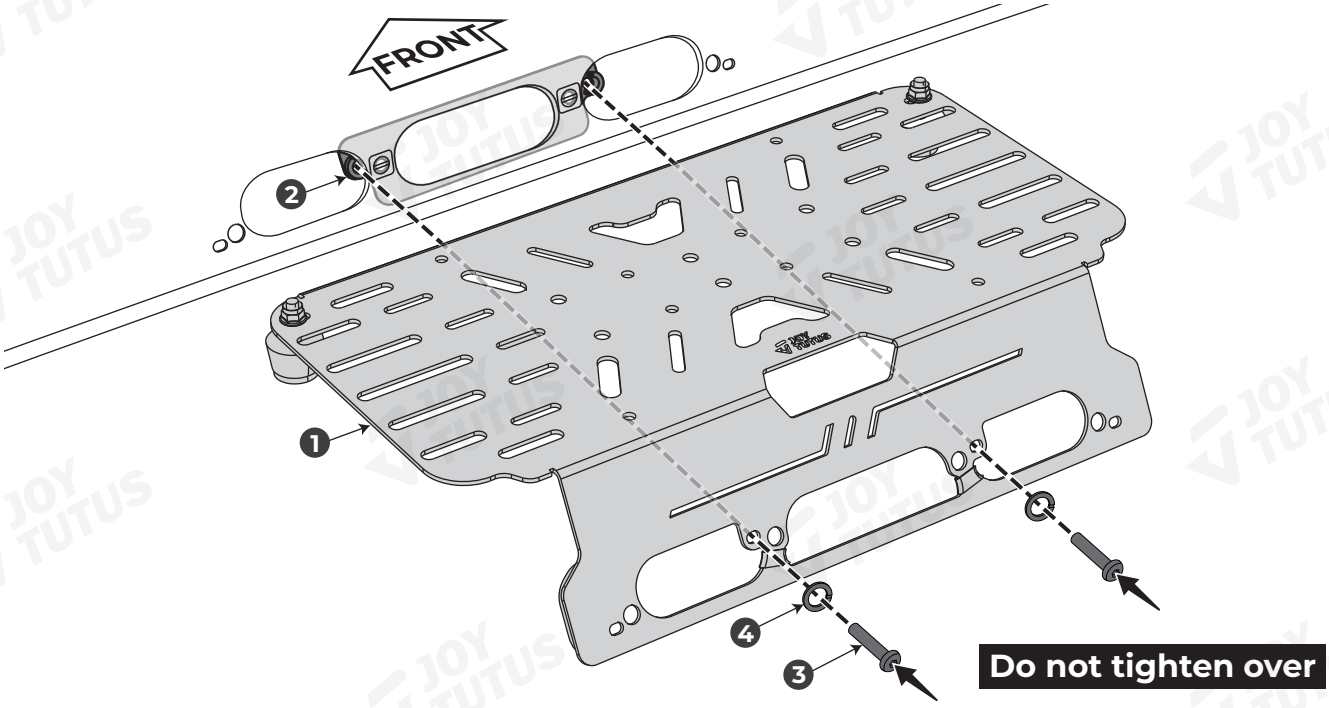

Do not tighten over

Align with the four holes on the vehicle, then tighten the two screws ❸.

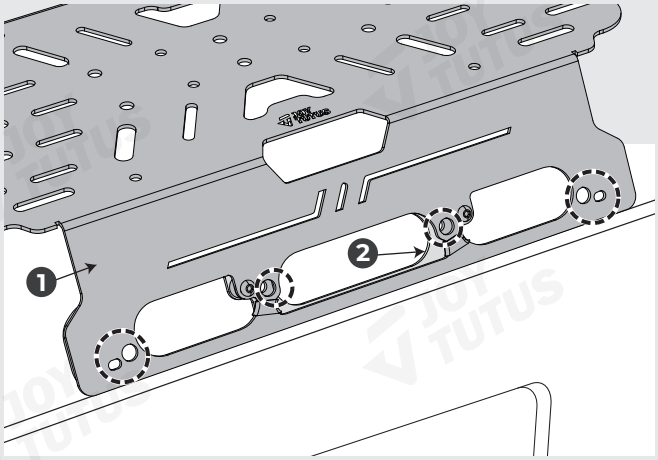

Height Adjustment: Loosen both ⓑ and ⓒ. Adjust ⓓ until it sits flush against the vehicle body. Tighten ⓑ first, then tighten ⓒ.

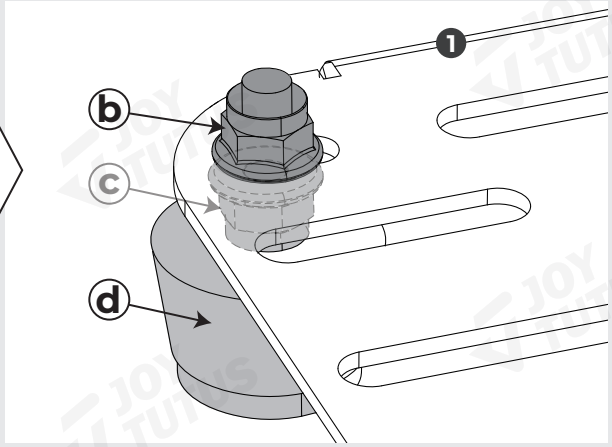

STEP 4:

STEP 4-1:

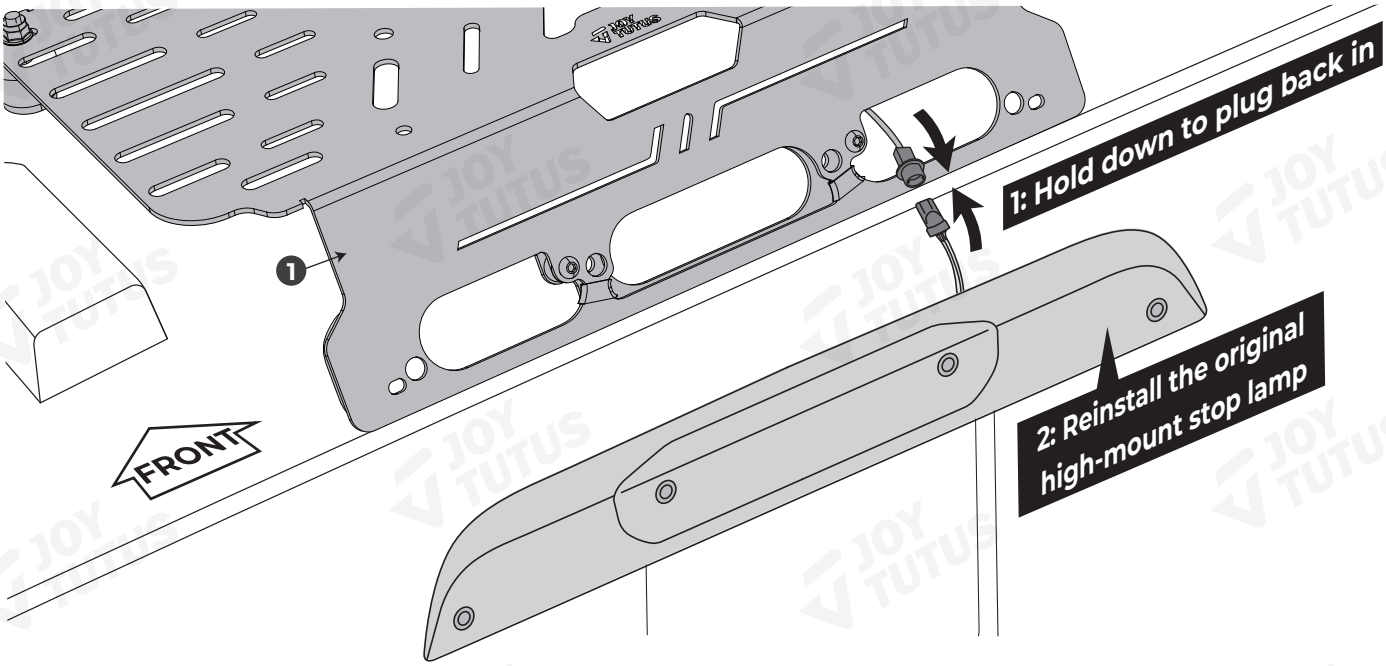

STEP 4-2: Fix using ❺ and the screw ⓐ retained in step 1-1.

Required accessories:

❺ ◎ x4	
Φ4*Φ10*1.5 Rubber Gasket	S=3 Hex Key (Self-provided)

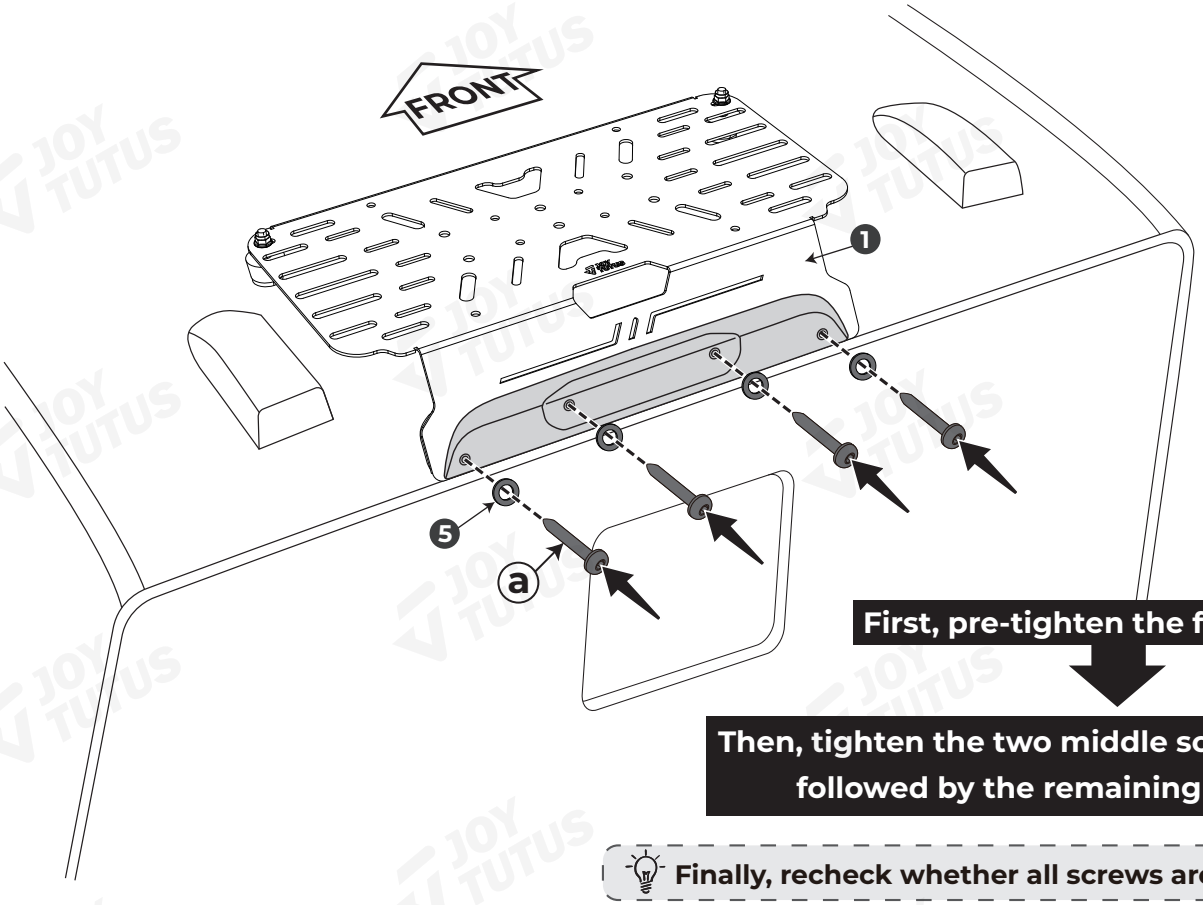

First, pre-tighten the four screws

Then, tighten the two middle screws first, followed by the remaining ones

Finally, recheck whether all screws are tightened.