A02/ EN

USAGE GUIDELINES

SKU: A1318-00217-BK1 / A1318-00217-BK2

IMPORTANT

Before installation, please make sure that all accessories are ready.
(As shown in the picture below).

Estimated installation time:

30-40 minutes

CUSTOMER SUPPORT

Contact us by email:
service@joytutus.com

JOYTUTUS help center:

http://support.joytutus.com

PRODUCT INFORMATION

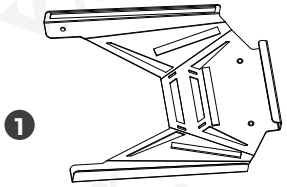

1 Bracket Assembly **x1**

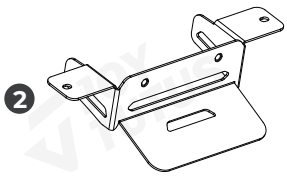

2 Left Bracket **x1**

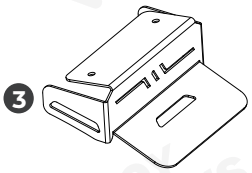

3 Right Bracket **x1**



4 Fixing Bracket **x1**



5 M6x16 Thumb Screw **x2**



6 M6 Split Lock Washer **x3**
(Includes 1 spare)



7 M6 Flat Washer **x3**
(Includes 1 spare)



8 M5 Lock Nut **x5**
(Includes 1 spare)



9 M5x12 Flange Screw **x3**
(Includes 1 spare)

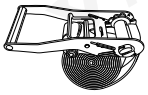

10 4m Ratchet Tie-Down Strap **x1**



11 S=8 Open-End Wrench **x1**



12 S=3 L-Type Hex Wrench **x1**

INSTALLATION COMPLETION DIAGRAM

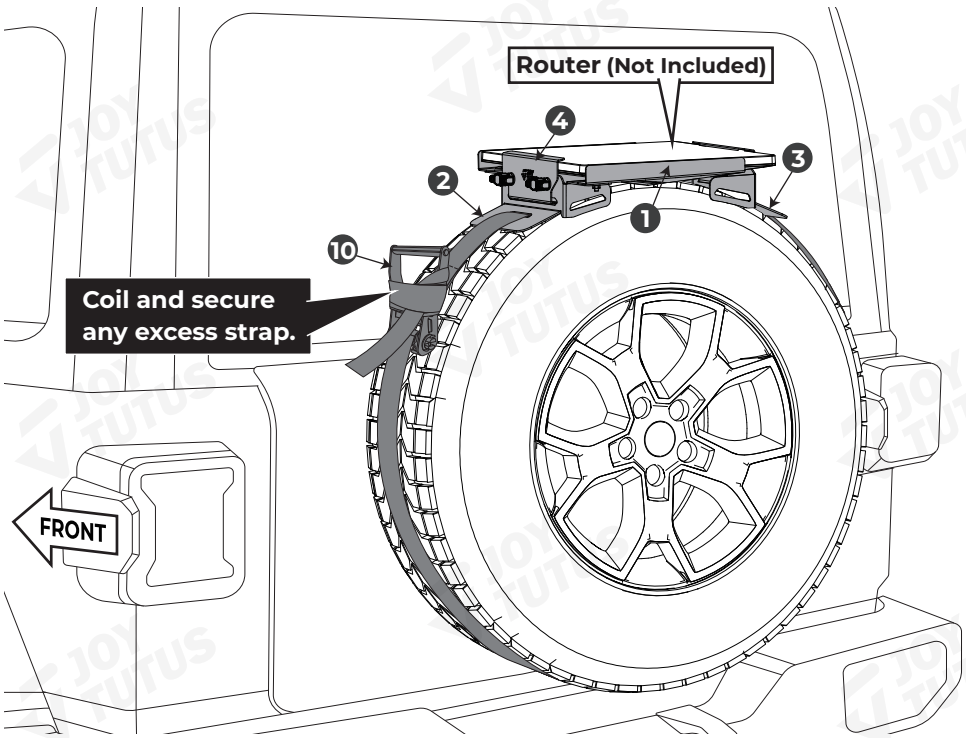

The following installation demonstration uses the low-profile router bracket as an example. The same installation method applies to the high-profile router bracket.

INSTALLATION METHOD

STEP 1:

Required accessories:

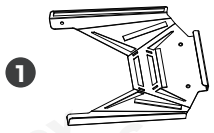

Bracket Assembly **x1**

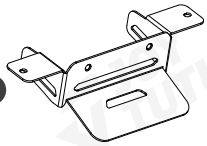

Left Bracket **x1**

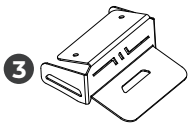

Right Bracket **x1**



M5 Flange Lock Nut **x4**



S=8 Open-End Wrench **x1**



M5x12 Flange Screw **x2**



S=3 L-Type Hex Wrench **x1**

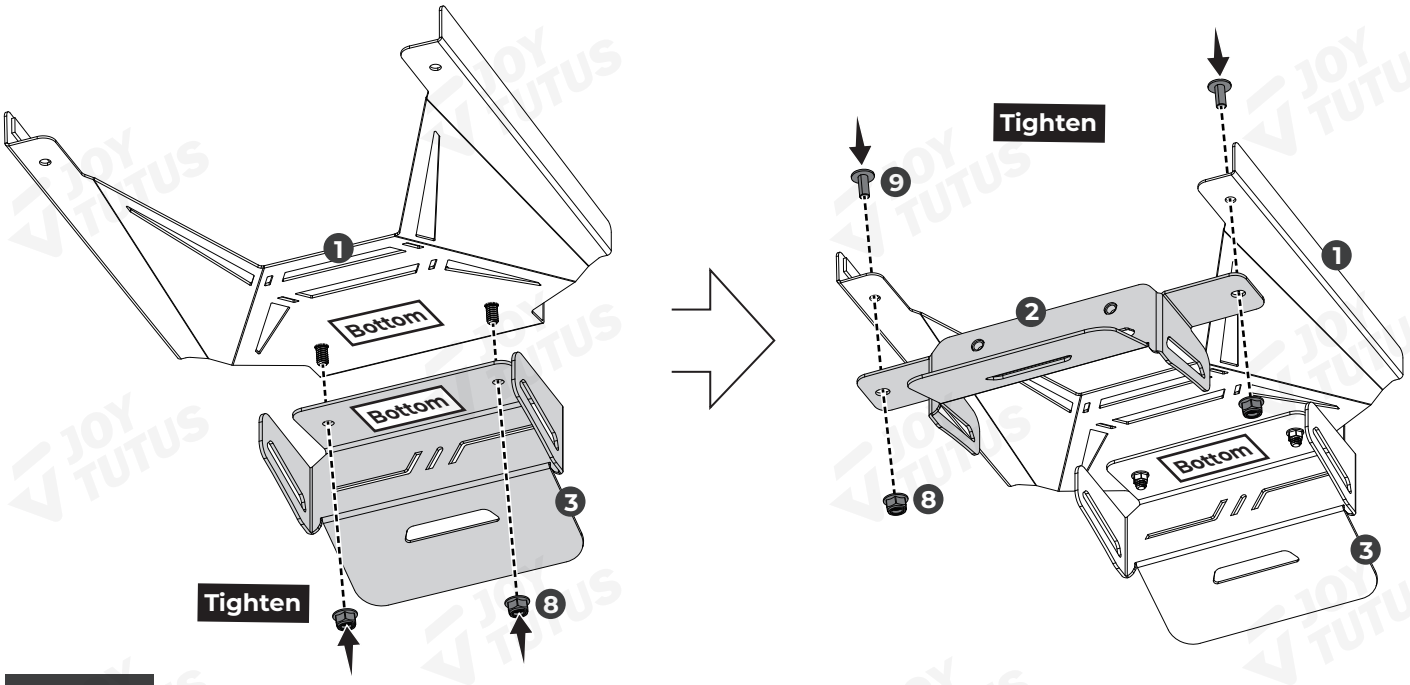

STEP 2:

Required accessories:



Fixing Bracket **x1**



M6x16 Thumb Screw **x2**



M6 Split Lock Washer **x2**



M6 Flat Washer **x2**

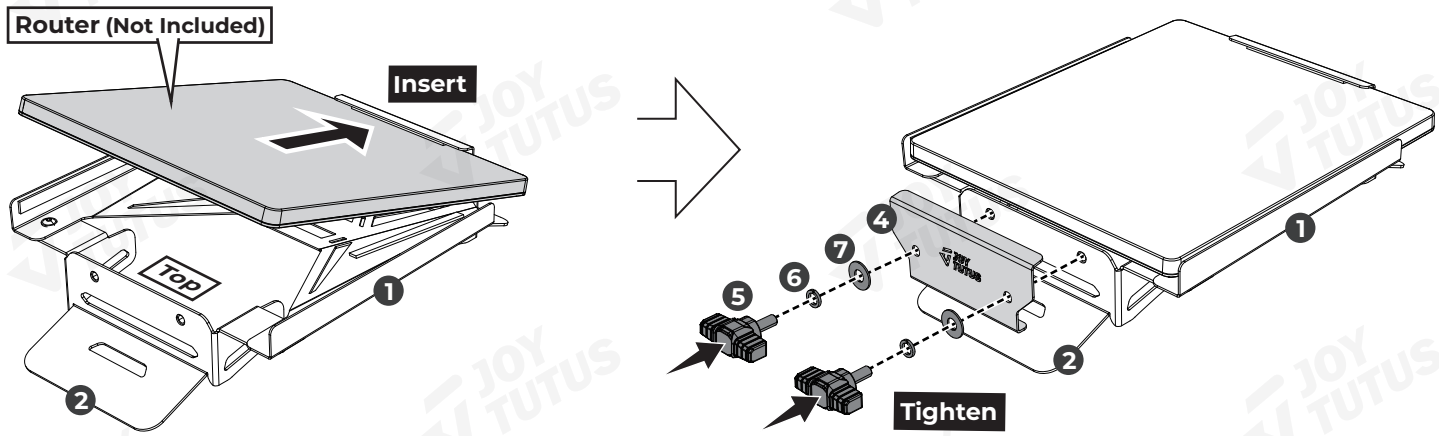

STEP 3:

Required accessories:



4m Ratchet Tie-Down Strap **x1**

STEP 3-1: Fix it by wrapping the tire around with ⑩.

Ensure that the router is positioned directly above the tire before tightening the strap.

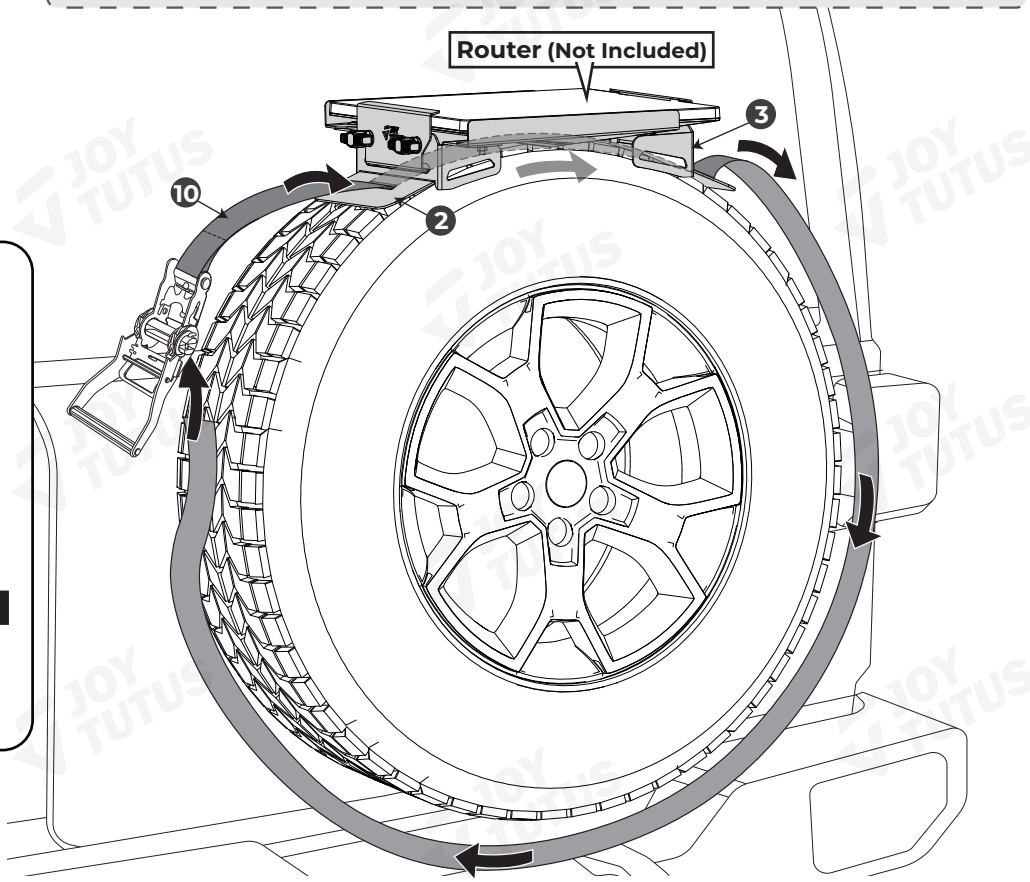

Prerequisite

2. Flip open

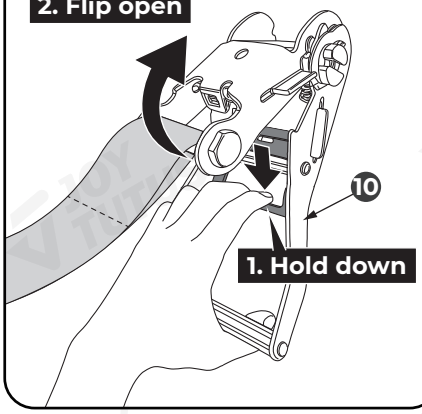

STEP 3-2:

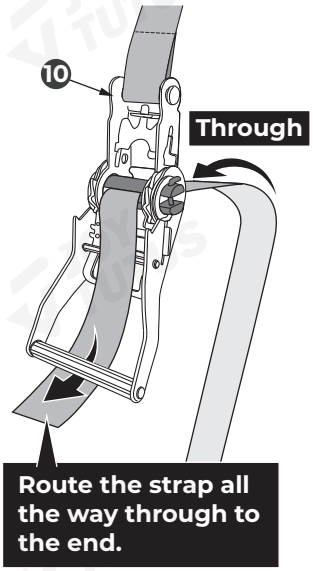

Route the strap all the way through to the end.

STEP 3-3:

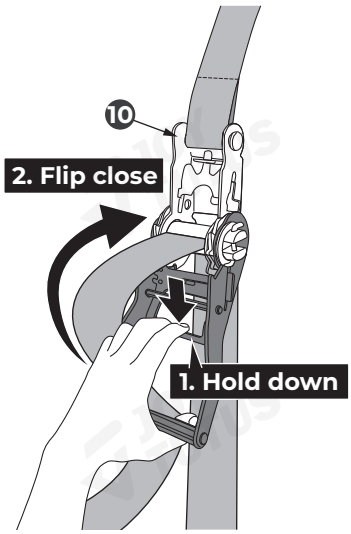

STEP 3-4:

Swing back and forth until the strap becomes tight.

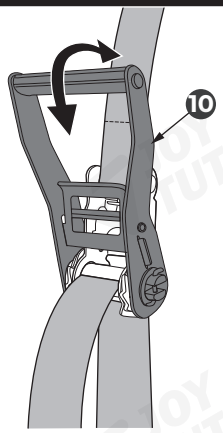

Loosen

During loosening, hold the router bracket steady to prevent it from falling and causing injury.

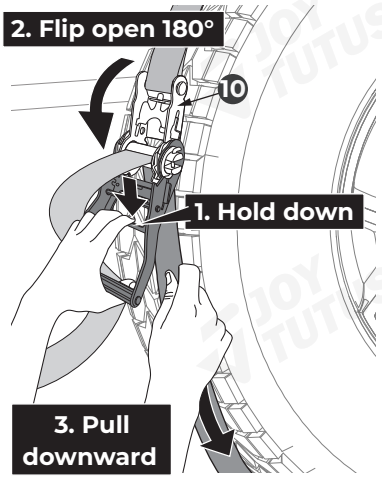

Connect the cables, and the installation is complete!