JOY TUTUS

A / EN

USAGE GUIDELINES

SKU: A1318-00218-BK

IMPORTANT

Before installation, please make sure that all accessories are ready.
(As shown in the picture below).

Estimated installation time:

20-30 minutes

CUSTOMER SUPPORT

Contact us by email:
service@joytutus.com

JOYTUTUS help center:

http://support.joytutus.com

PRODUCT INFORMATION

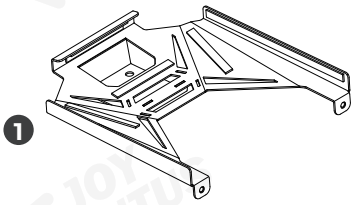

1 Bracket Assembly **x1**

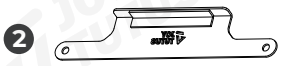

2 Adjustable Bracket Assembly **x1**

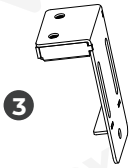

3 Fixed Bracket Assembly **x1**

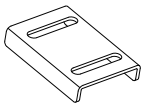

4 Adjusting Sheet Metal **x1**



5 Locking Sheet Metal **x1**



6 Rubber Foot Pad **x1**



7 M6 Large Washer **x2**



8 M6 Spring Washer **x2**



9 M6 Hand Screw **x2**



10 M8 Large Washer **x4**



11 M8 Spring Washer **x4**



12 M8*20 Hexagon Socket Flat Head Screw **x4**



13 M8*35 Hexagon Socket Flat Head Screw **x2**

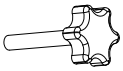

14 M8 Hand Screw **x1**



15 S=5 Hexagon Wrench **x1**

INSTALLATION COMPLETION DIAGRAM

Vehicle Without Bed Rails:

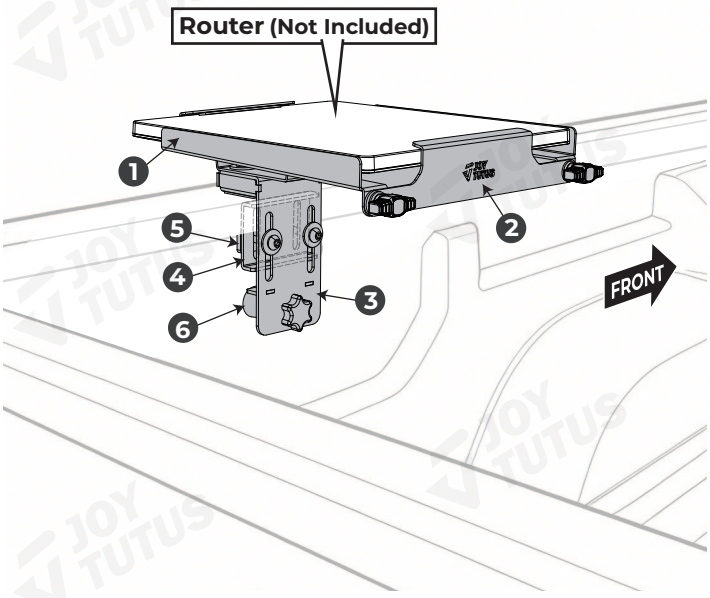

Vehicle With Bed Rails:

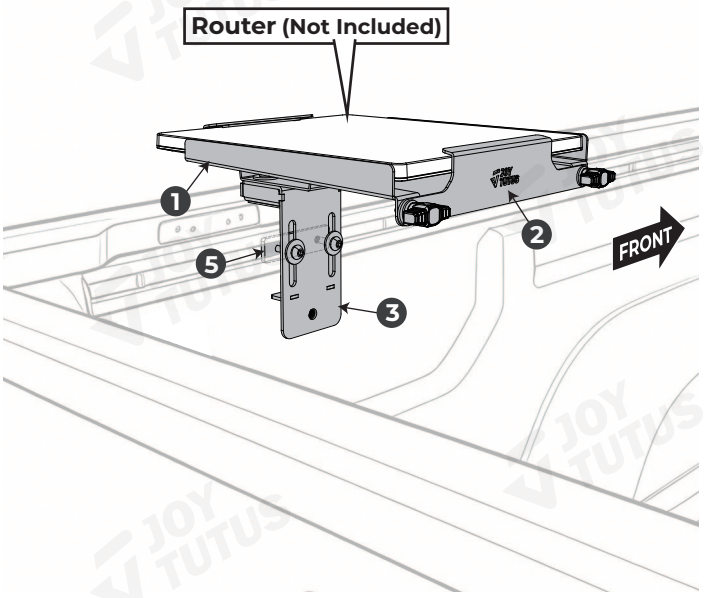

INSTALLATION METHOD

Vehicle Without Bed Rails:

STEP 1:

Required accessories:

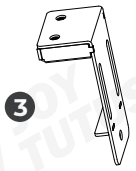

3 Fixed Bracket Assembly **x1**

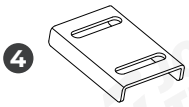

4 Adjusting Sheet Metal **x1**



5 Locking Sheet Metal **x1**



6 Rubber Foot Pad **x1**



11 M8 Spring Washer **x2**



10 M8 Large Washer **x2**



13 M8*35 Hexagon Socket Flat Head Screw **x2**



14 M8 Hand Screw **x1**



15 S=5 Hexagon Wrench **x1**

STEP 1-1:

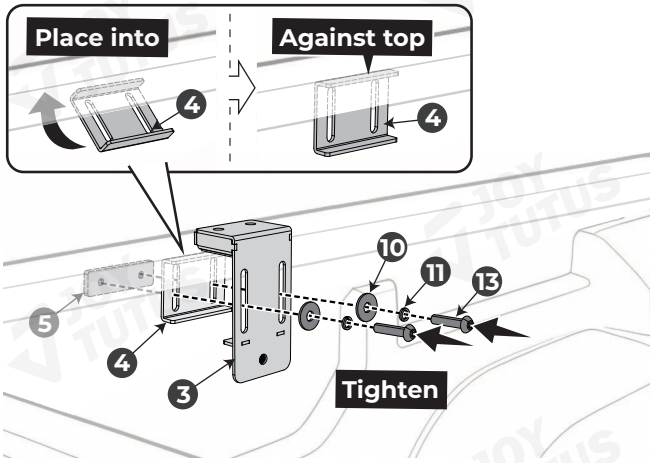

STEP 1-2:

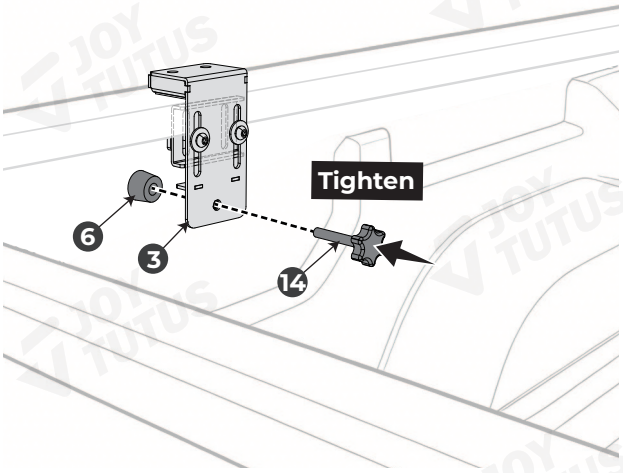

STEP 2:

Required accessories:

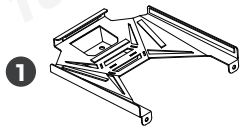

1 Bracket Assembly **x1**



10 M8 Large Washer **x2**



11 M8 Spring Washer **x2**



12 M8*20 Hexagon Socket Flat Head Screw **x2**



15 S=5 Hexagon Wrench **x1**

Mounting Holes:

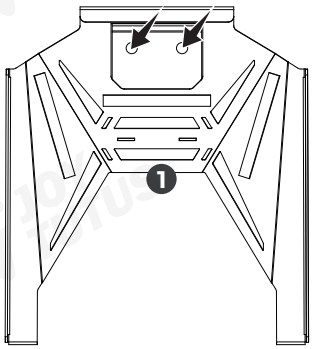

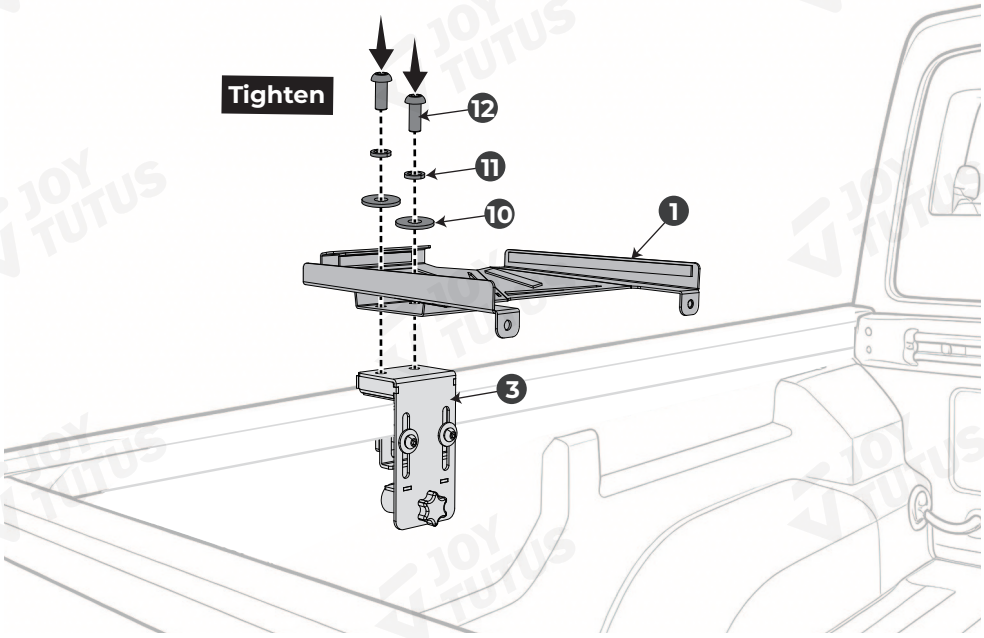

STEP 3:

Required accessories:



Adjustable Bracket Assembly **x1**



M6 Large Washer **x2**



M6 Spring Washer **x2**



M6 Hand Screw **x2**

STEP 3-1:

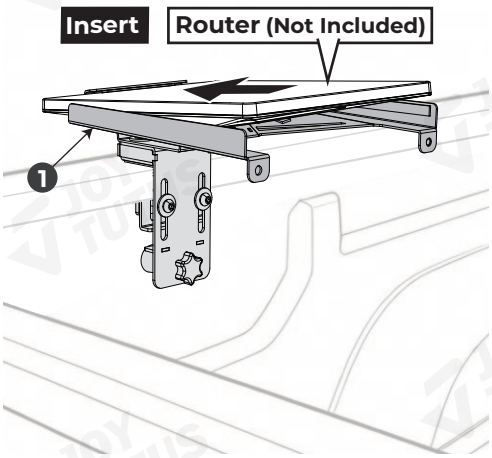

STEP 3-2:

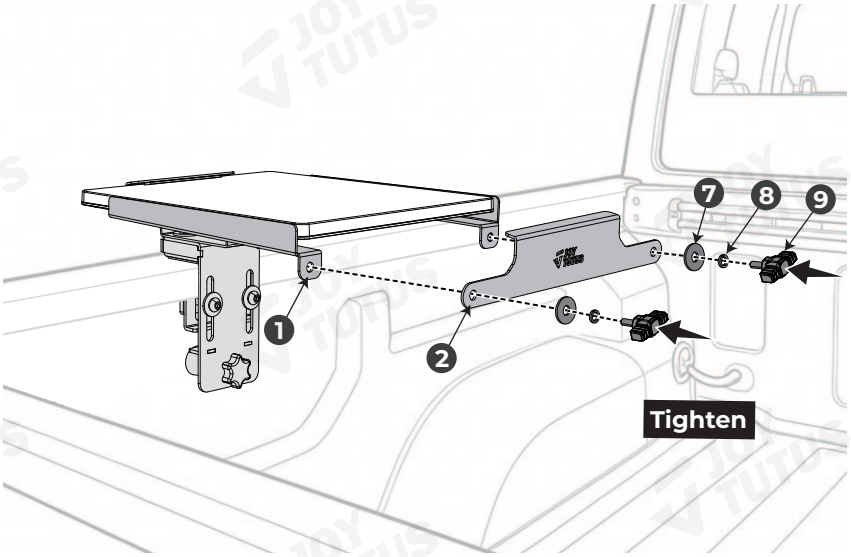

Vehicle With Bed Rails:

STEP 1:

Required accessories:

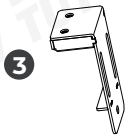

Fixed Bracket Assembly **x1**



Locking Sheet Metal **x1**



M8 Large Washer **x2**



M8 Spring Washer **x2**



M8*20 Hexagon Socket Flat Head Screw **x2**

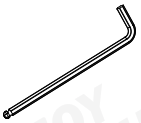

S=5 Hexagon Wrench **x1**

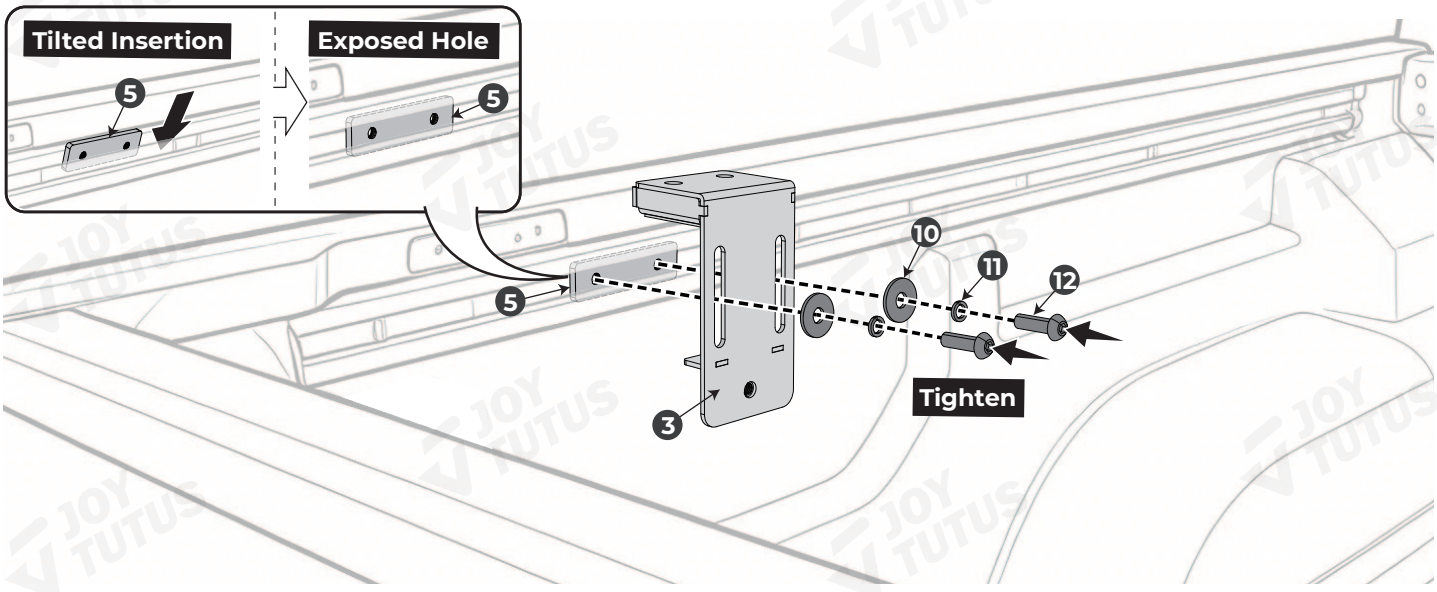

STEP 2:

Required accessories:

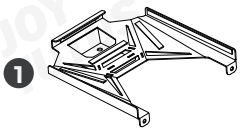

Bracket Assembly **x1**



M8 Large Washer **x2**



M8 Spring Washer **x2**



M8*20 Hexagon Socket Flat Head Screw **x2**



S=5 Hexagon Wrench **x1**

Mounting Holes:

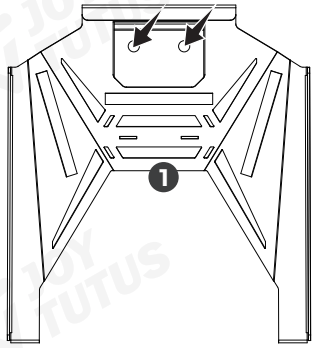

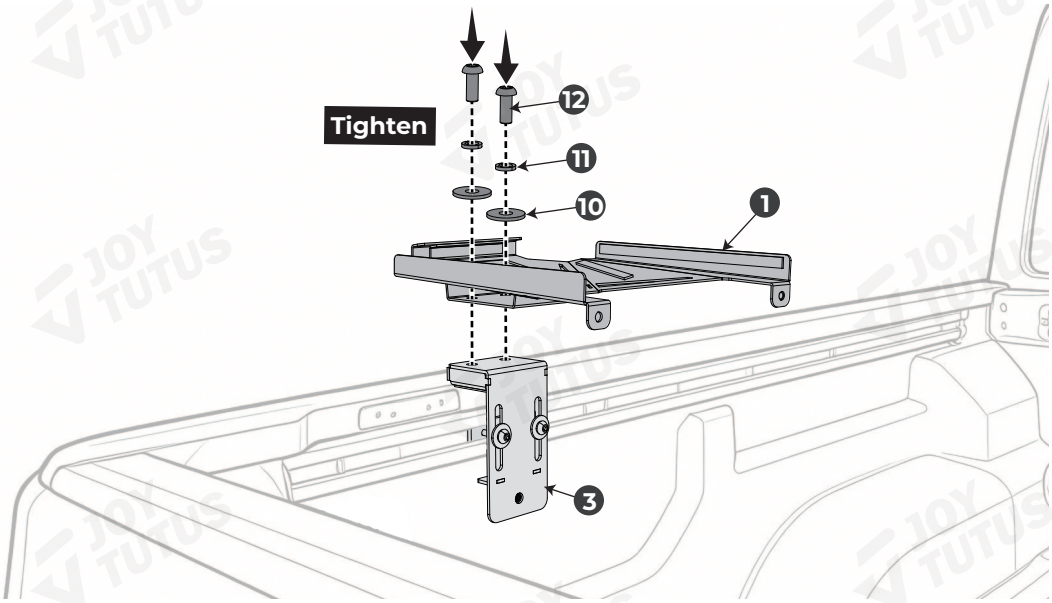

STEP 3:

Required accessories:



Adjustable Bracket Assembly **x1**



M6 Large Washer **x2**



M6 Spring Washer **x2**



M6 Hand Screw **x2**

STEP 3-1:

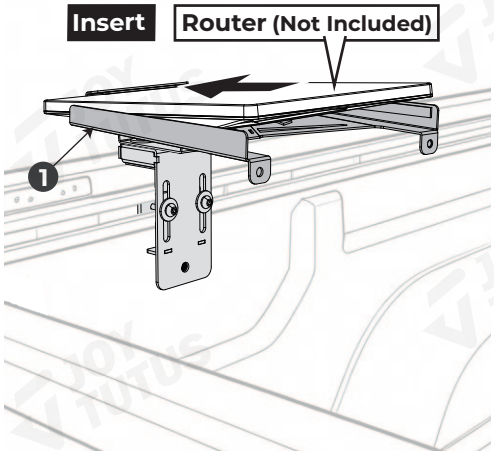

STEP 3-2:

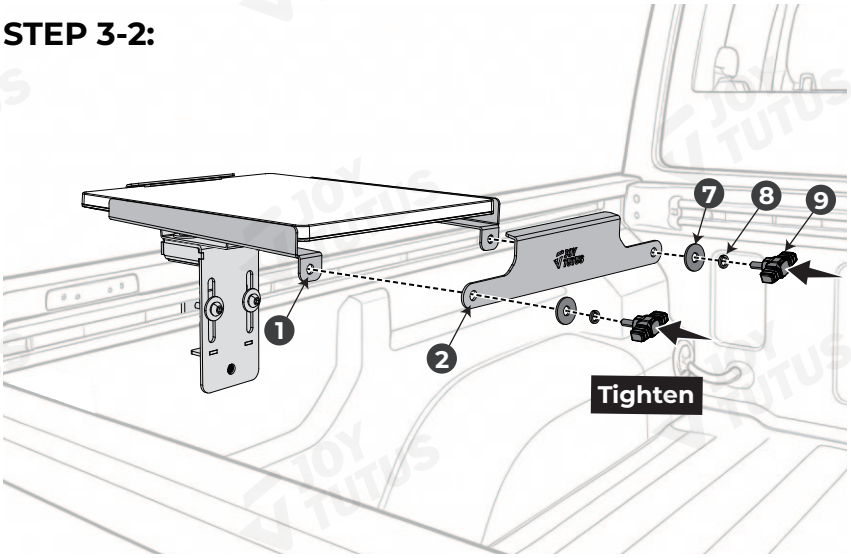

Connect the cables, and the installation is complete!