JOY TUTUS

A01 EN

USAGE GUIDELINES

SKU: A1318-00219-BK

IMPORTANT

Before installation, please make sure that all accessories are ready.
(As shown in the picture below).

Estimated installation time:

20-30 minutes

CUSTOMER SUPPORT

Contact us by email:
service@joytutus.com

JOYTUTUS help center:

http://support.joytutus.com

PRODUCT INFORMATION

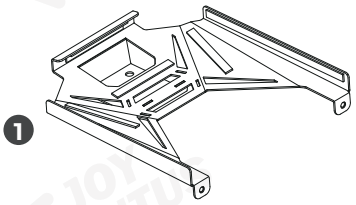

1 Bracket Assembly **x1**



2 Support Bracket Assembly **x1**

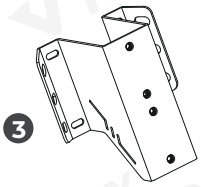

3 Fixed Bracket Assembly **x1**



4 Adjustable Bracket Assembly **x1**



5 M6 Large Washer **x6**



6 M6 Spring Washer **x6**



7 M6 Hand Screw **x2**



8 M8 Large Washer **x4**



9 M8 Spring Washer **x4**



10 M8 Hexagon Socket Flat Head Screw **x2**



11 M6 Hexagon Socket Flat Head Screw **x4**



12 M8 Hand Screw **x2**



13 S=4 Hexagon Wrench **x1**



14 S=5 Hexagon Wrench **x1**



T30 Torx wrench (Self-supplied) **x1**

INSTALLATION COMPLETION DIAGRAM

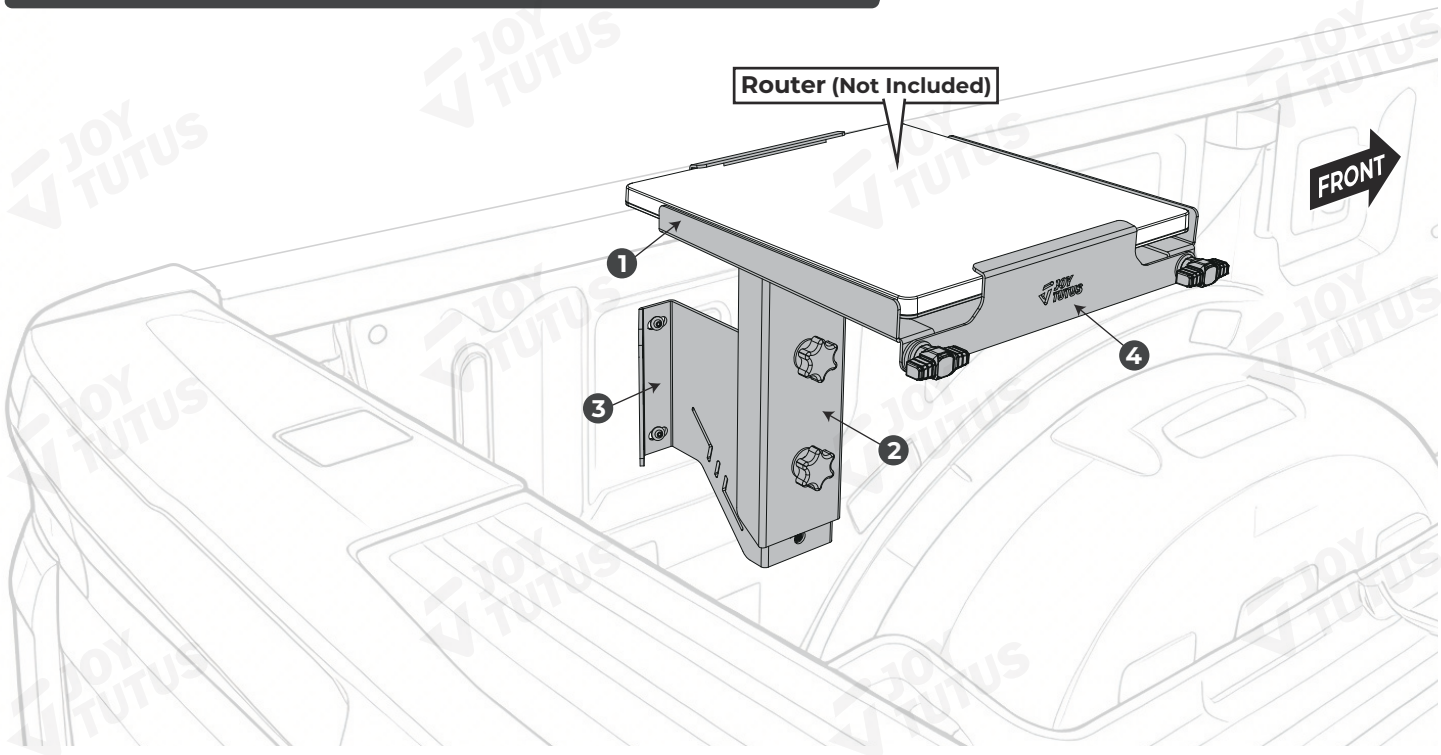

INSTALLATION METHOD

STEP 1:

Required accessories:

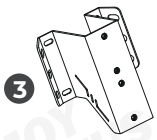

③ Fixed Bracket Assembly **x1**



⑥ M6 Spring Washer **x4**



⑤ M6 Large Washer **x4**



⑪ M6 Hexagon Socket Flat Head Screw **x4**



⑬ S=4 Hexagon Wrench **x1**



T30 Torx wrench (Self-supplied) **x1**

STEP 1-1: Remove the four original vehicle screws.

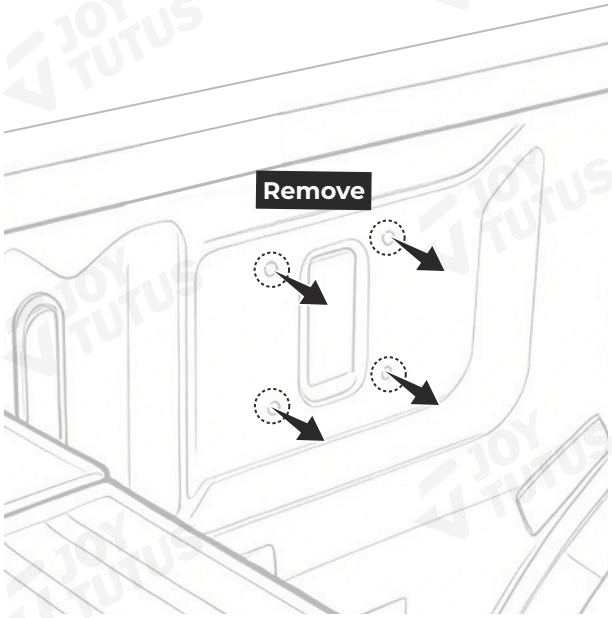

STEP 1-2:

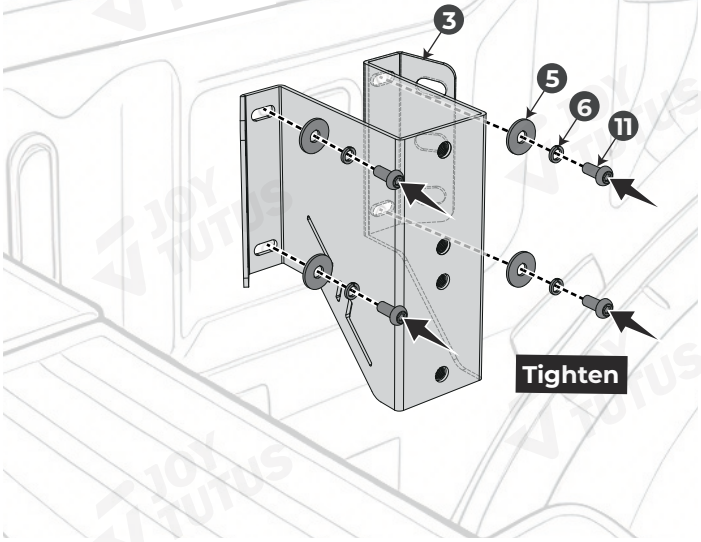

STEP 2:

Required accessories:



② Support Bracket Assembly **x1**



⑫ M8 Hand Screw **x2**



⑧ M8 Large Washer **x2**



⑨ M8 Spring Washer **x2**

Select the desired height setting on ③ before installing ②.

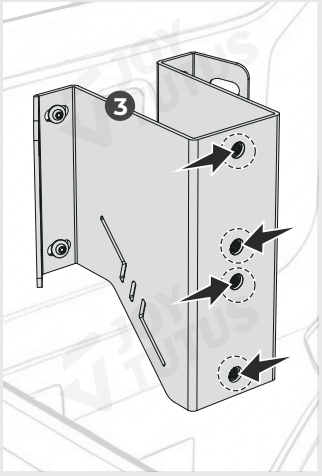

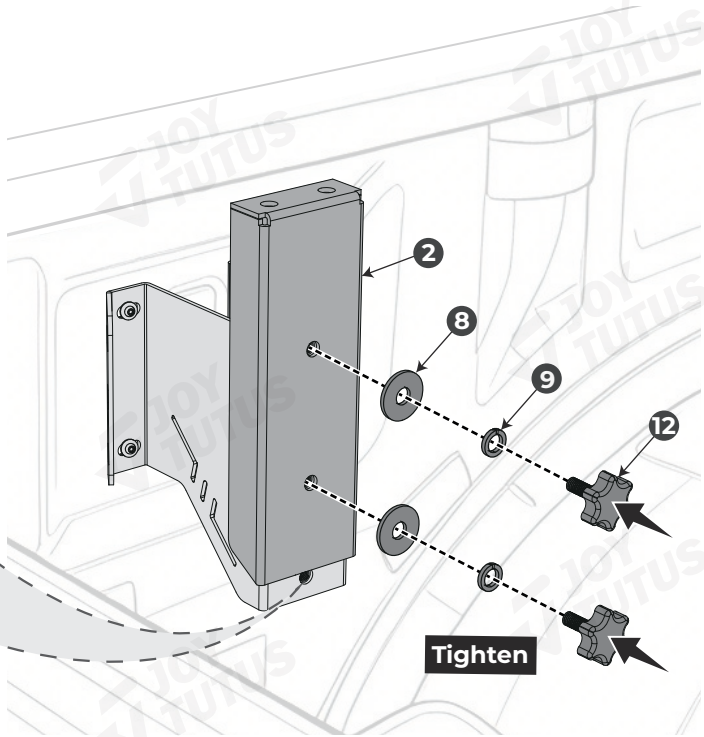

STEP 3:

Required accessories:

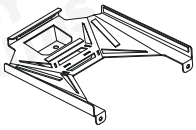

Bracket Assembly **x1**



M8 Large Washer **x2**



M8 Spring Washer **x2**



M8 Hexagon Socket Flat Head Screw **x2**

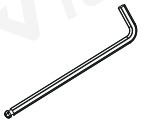

S=5 Hexagon Wrench **x1**

Mounting Holes:

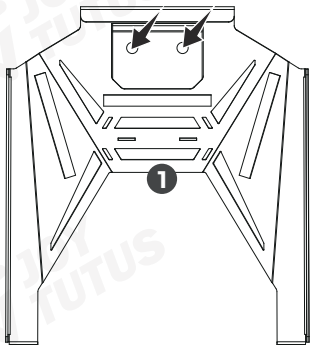

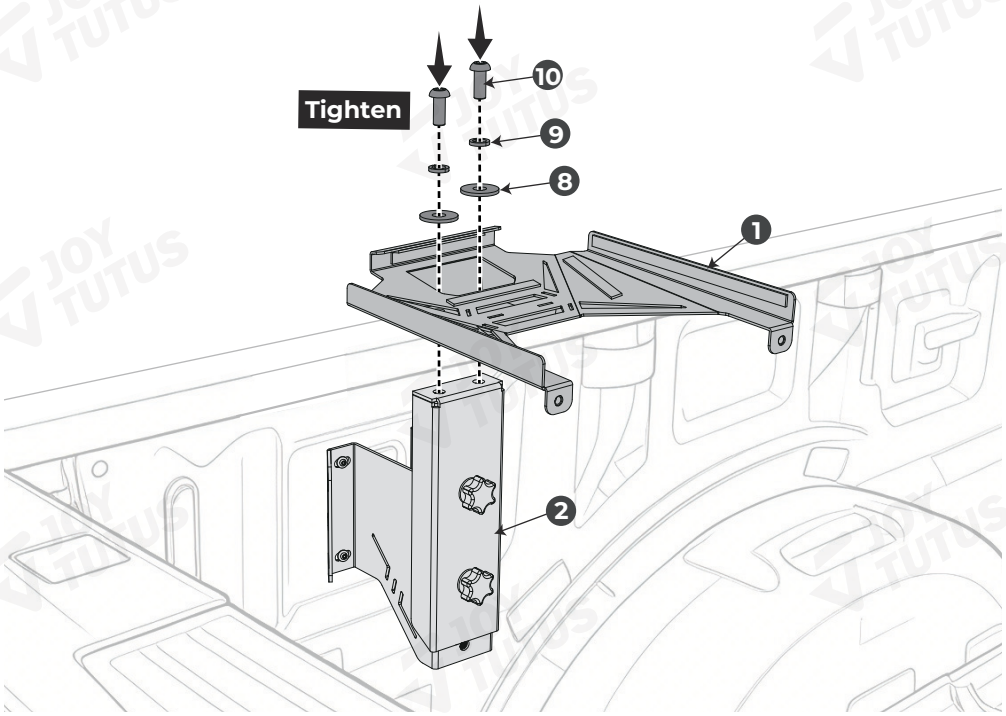

STEP 4:

Required accessories:



Adjustable Bracket Assembly **x1**



M6 Large Washer **x2**



M6 Spring Washer **x2**



M6 Hand Screw **x2**

STEP 4-1:

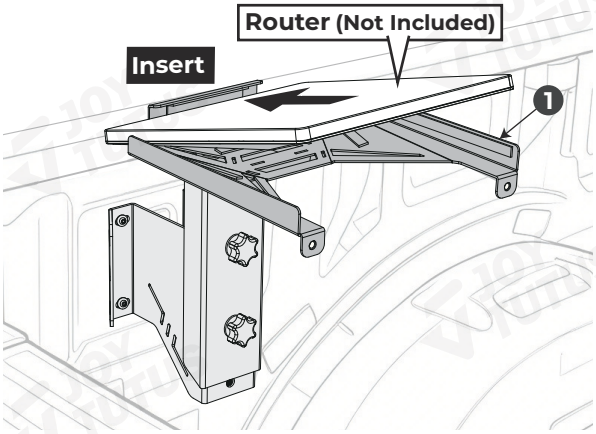

STEP 4-2:

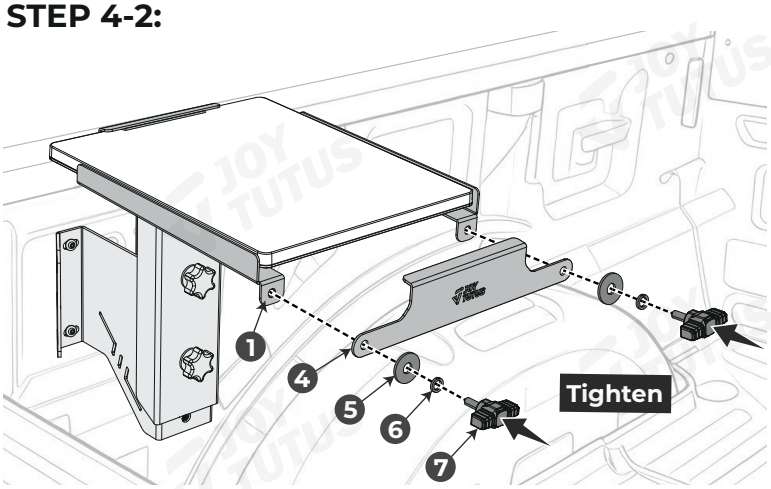

Connect the cables, and the installation is complete!